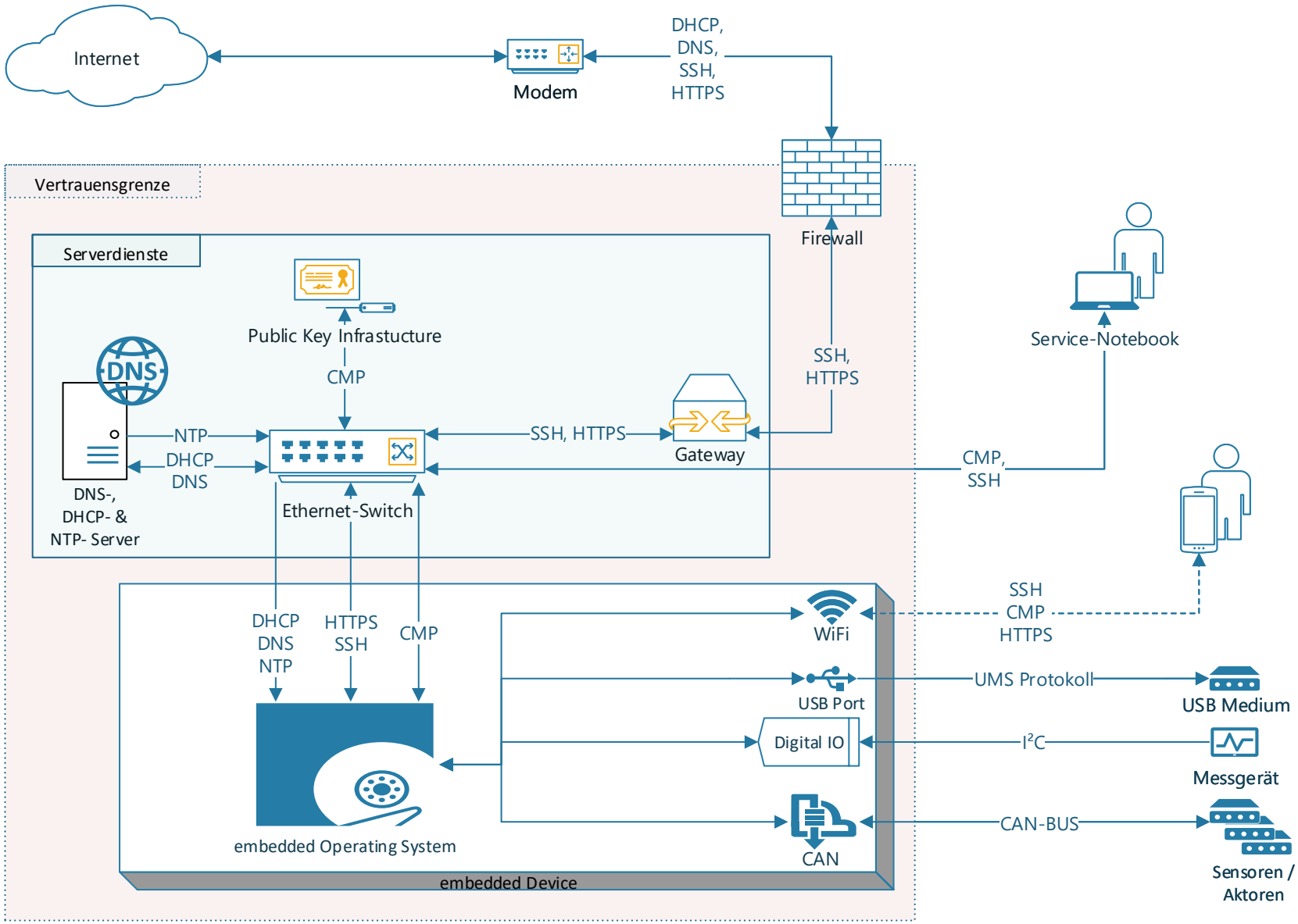
Internet
Modem
DHCP,
DNS,
SSH,
HTTPS
Vertrauensgrenze
Firewall
Serverdienste
Public Key Infrastucture
CMP
DNS
NTP
DHCP
DNS
DNS-,
DHCP- &
NTP- Server
Ethernet-Switch
SSH, HTTPS
Gateway
SSH,
HTTPS
Service-Notebook
CMP,
SSH
DHCP
DNS
NTP
HTTPS
SSH
CMP
WiFi
SSH
CMP
HTTPS
USB Port
UMS Protokoll
USB Medium
Digital IO
I²C
Messgerät
CAN
CAN-BUS
Sensoren /
Aktoren
embedded Operating System
embedded Device